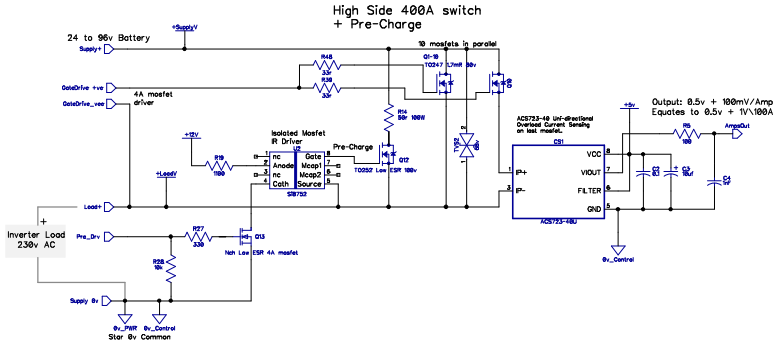
High Side 400A switch
+ Pre-Charge
24 to 96v Battery
10 mosfets in parallel
4A mosfet driver
Isolated Mosfet IR Driver
Pre-Charge
Output: 0.5v + 100mV/Amp
Equates to 0.5v + 1V\100A
Inverter Load 230v AC
Star 0v Common

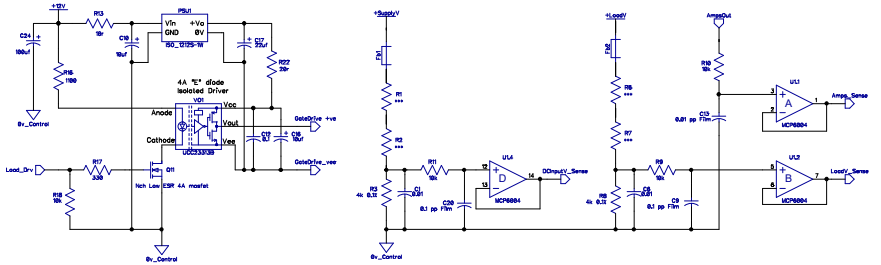
4A "E" diode isolated Driver
Nch Low ESR 4A mosfet

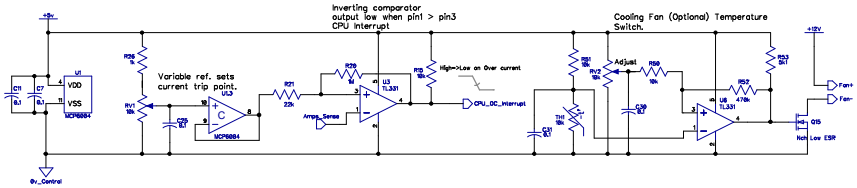
Inverting comparator output low when pin1 > pin3
CPU interrupt
Cooling Fan (Optional) Temperature Switch.
Variable ref. sets current trip point.
High->Low on Over current
Adjust

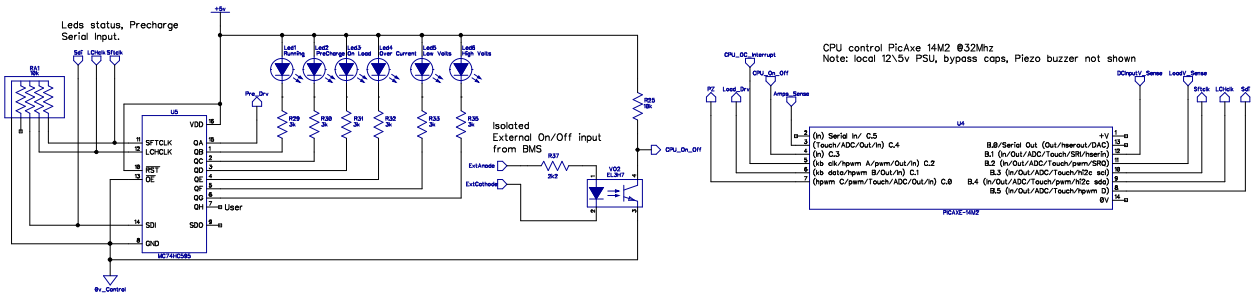
Leds status, Precharge Serial Input.
Isolated External On/Off input from BMS
CPU control PicAxe 14M2 @32Mhz
Note: local 12\5v PSU, bypass caps, Piezo buzzer not shown